M3D Edero
Arm Support Adapter

16.1022

2021-09-30

00.5183~A

Rehadapt Engineering GmbH & Co. KG

Heinrich-Hertz-Str. 104
34123 Kassel, Germany

Tel.: +49 561 220 717 0
Fax: +49 561 220 717 99

officeteam@rehadapt.com
https://rehadapt.com

Rehadapt North America

40 Oser Ave, Suite 40-01
Hauppauge, NY 11788

Tel.: 1 (888) 635-6962
Fax: 1 (888) 635-6962

officeteam.na@rehadapt.com
https://rehadapt.com

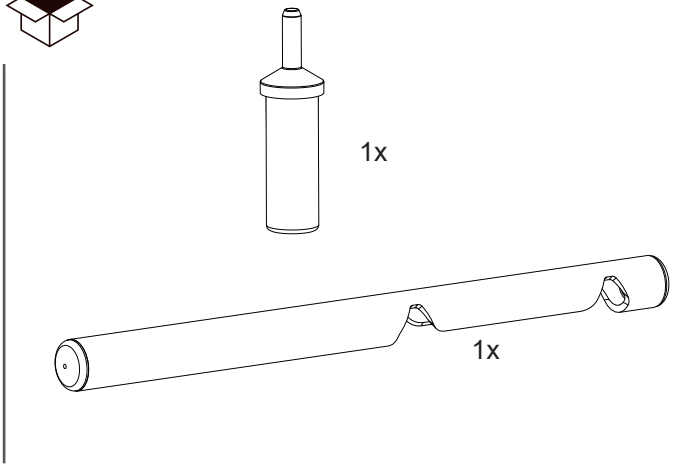

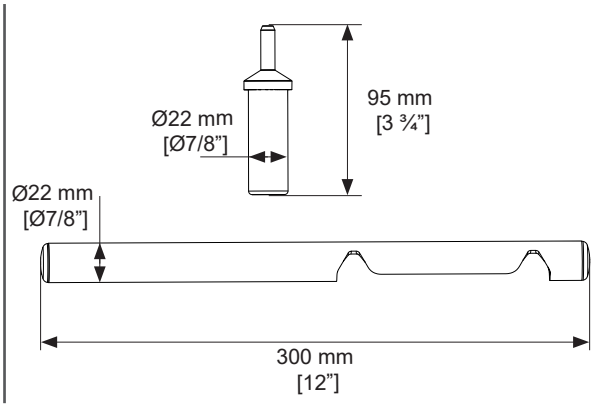

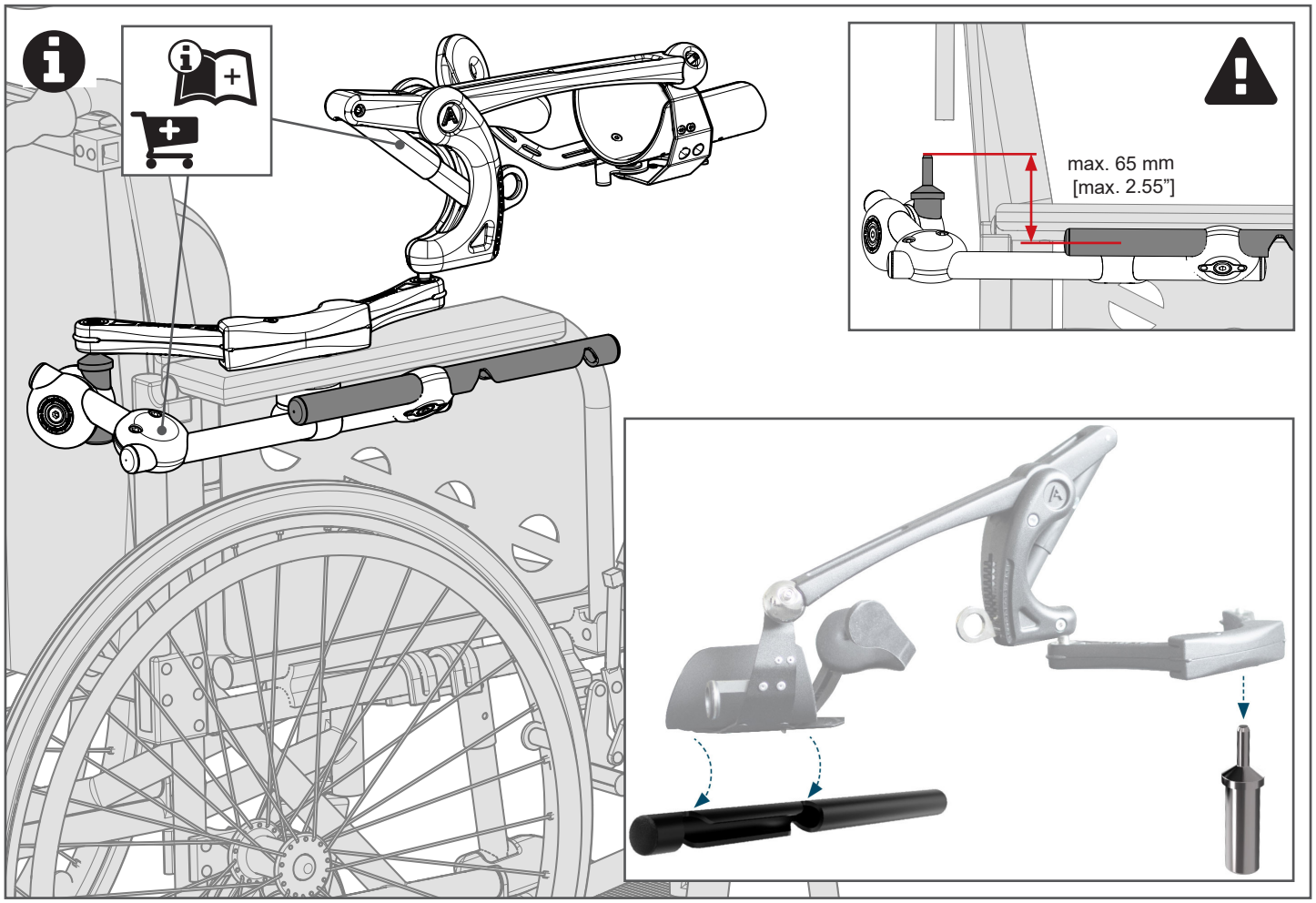

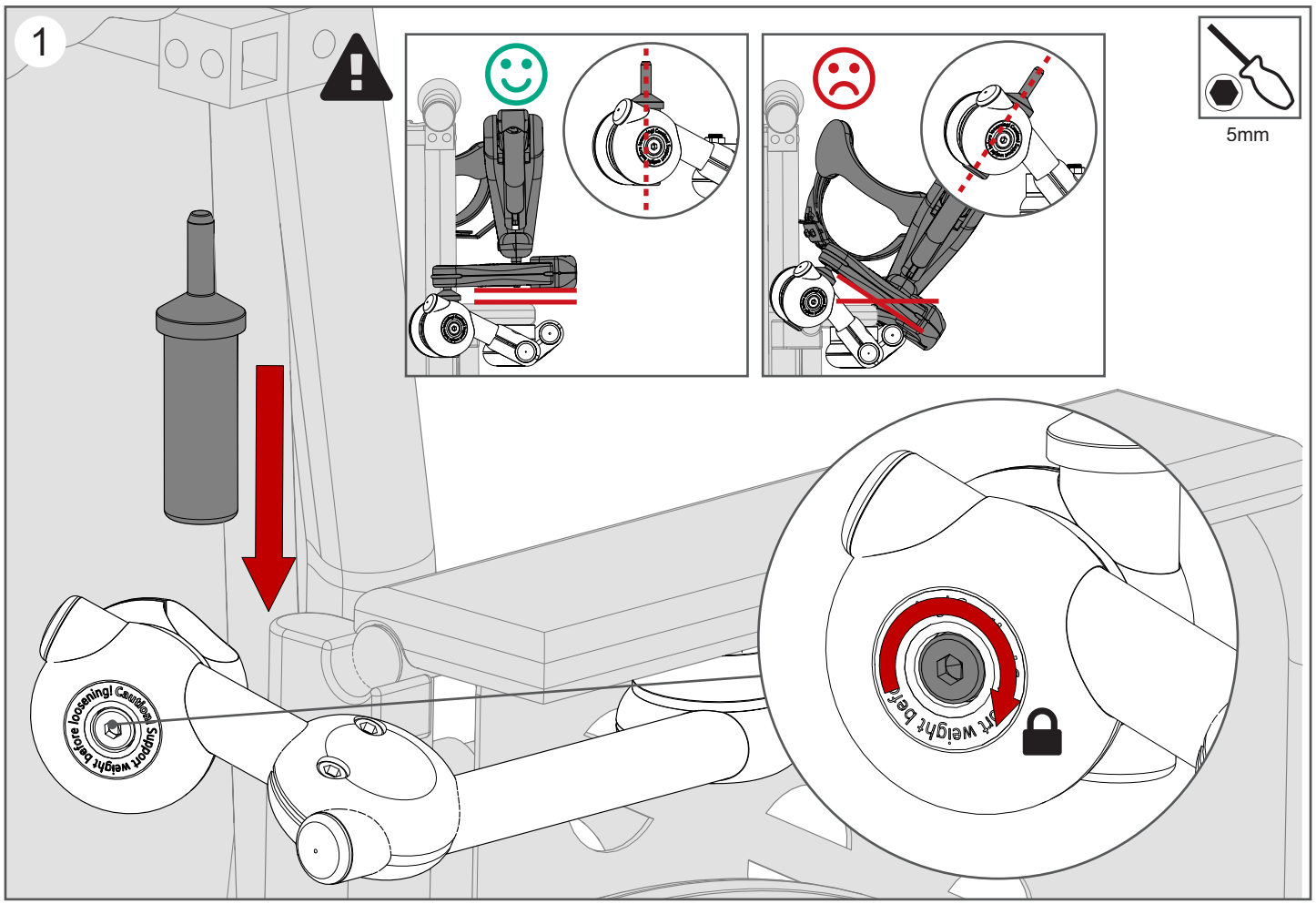
1
5mm
Support weight before loosening! Caution!

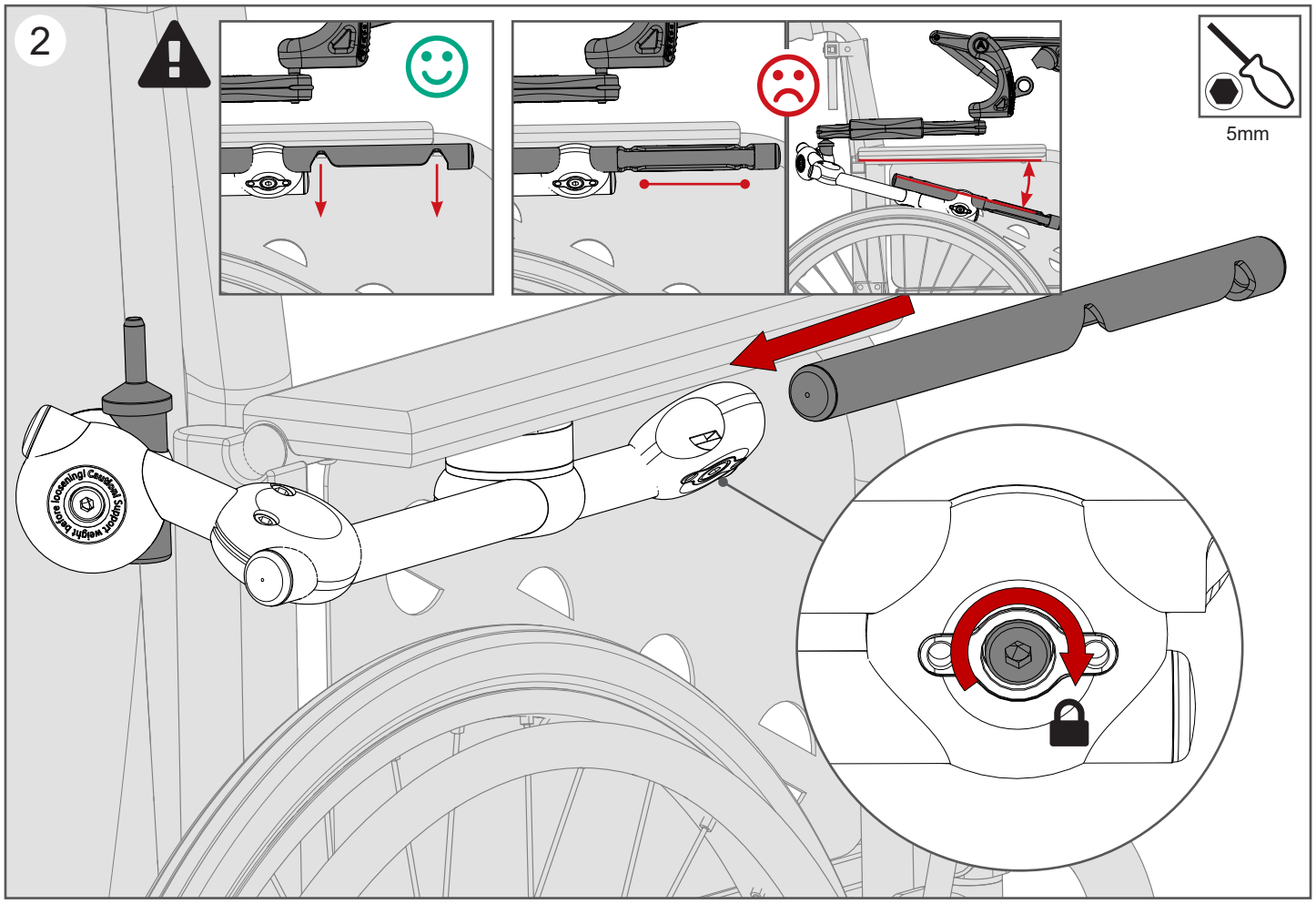
2
5mm
Support weight before loosening! Caution!