M3D H3D

L3D

2021-03-08

00.5148~A

Monty 3D

- 11.3312 **Monty 3D Plus**
- 11.3312CM **Custom Monty 3D Plus**

Sicherheitshinweise
Safety Instructions

Montage
Assembly Instructions

Handhabung
Handling

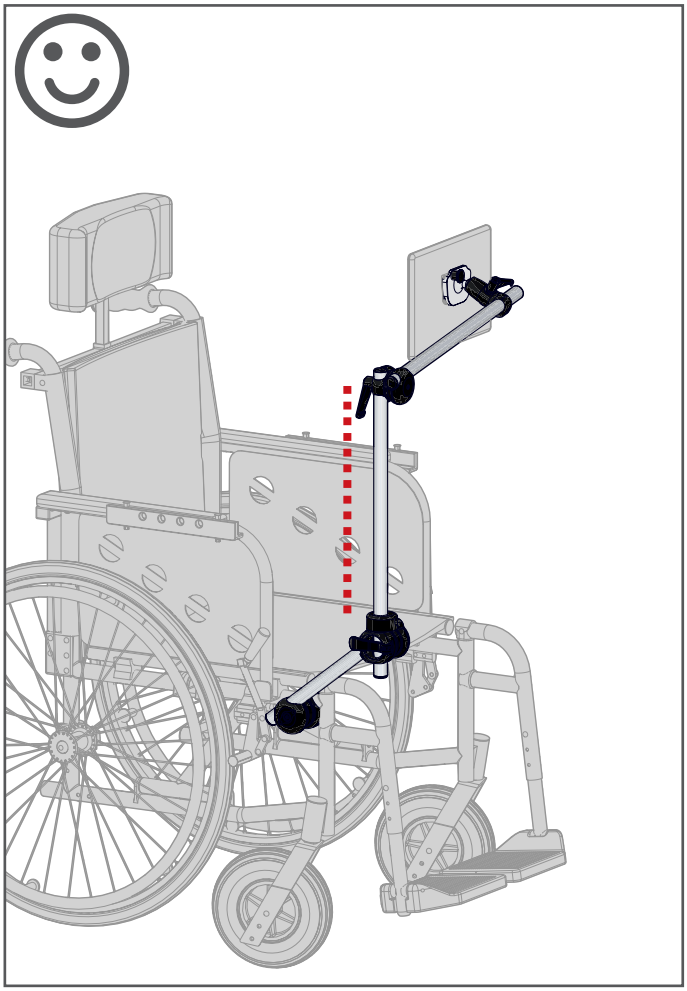

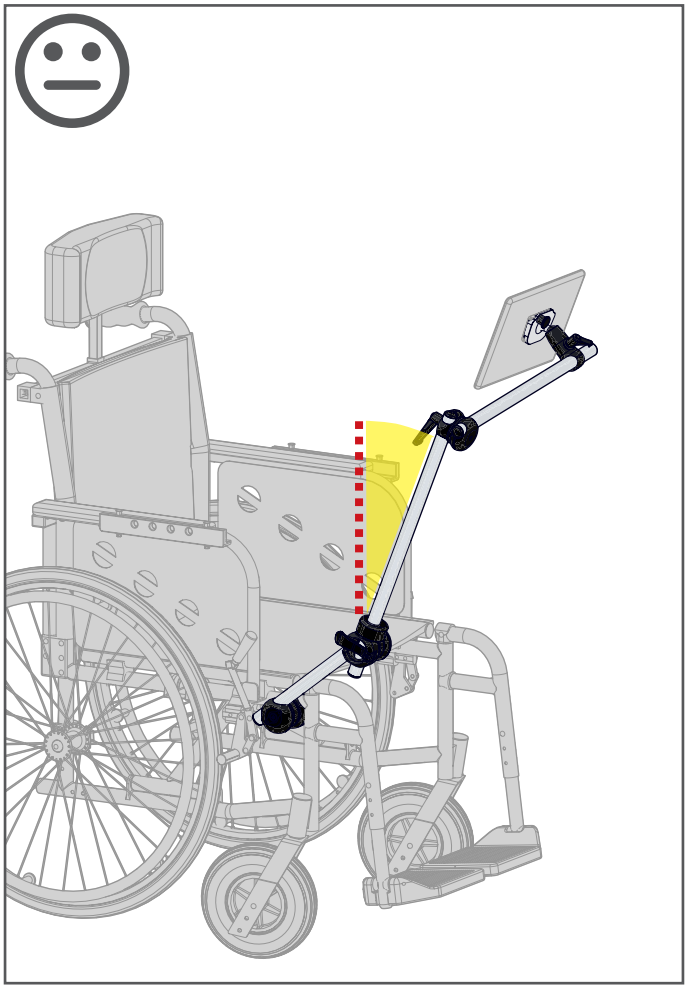

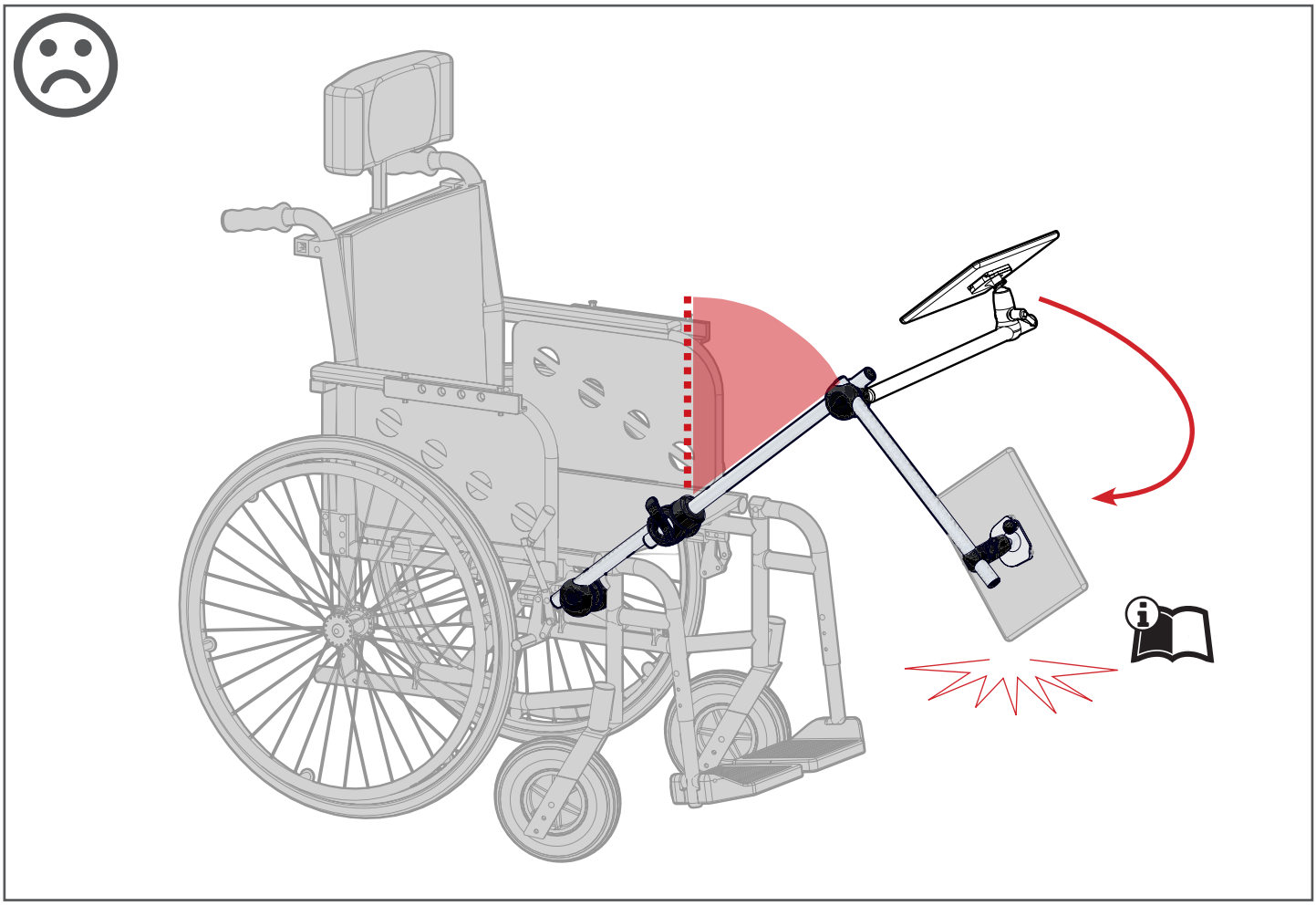

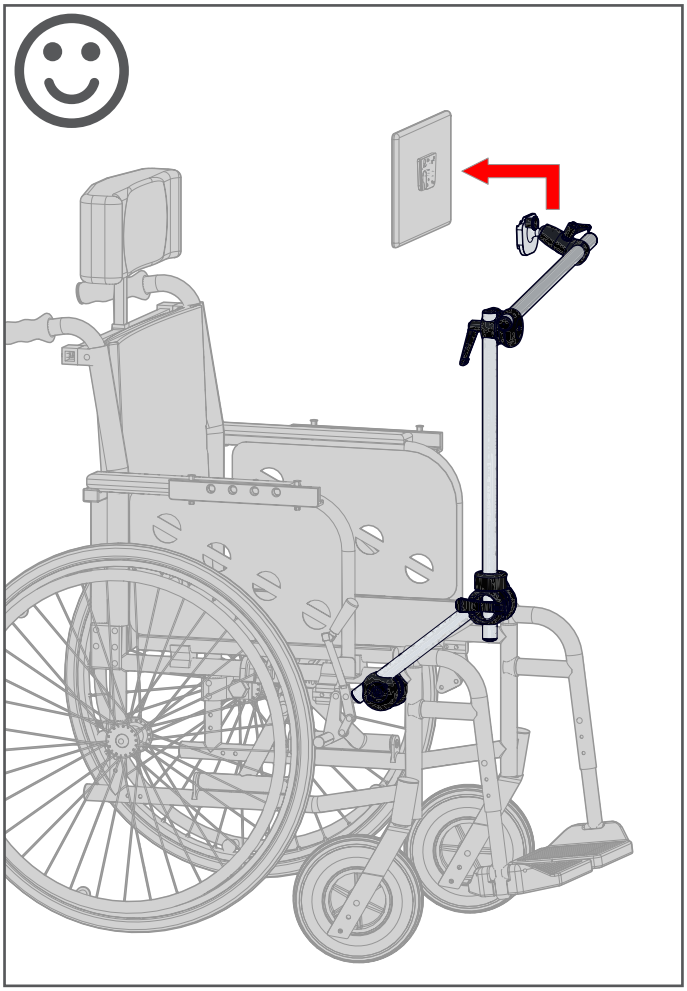

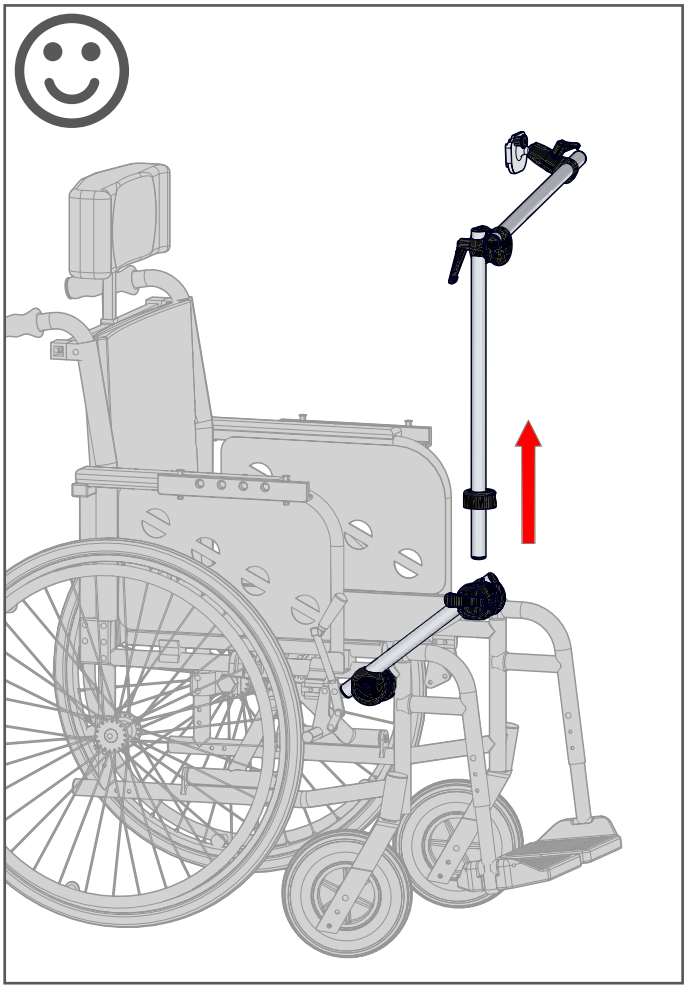

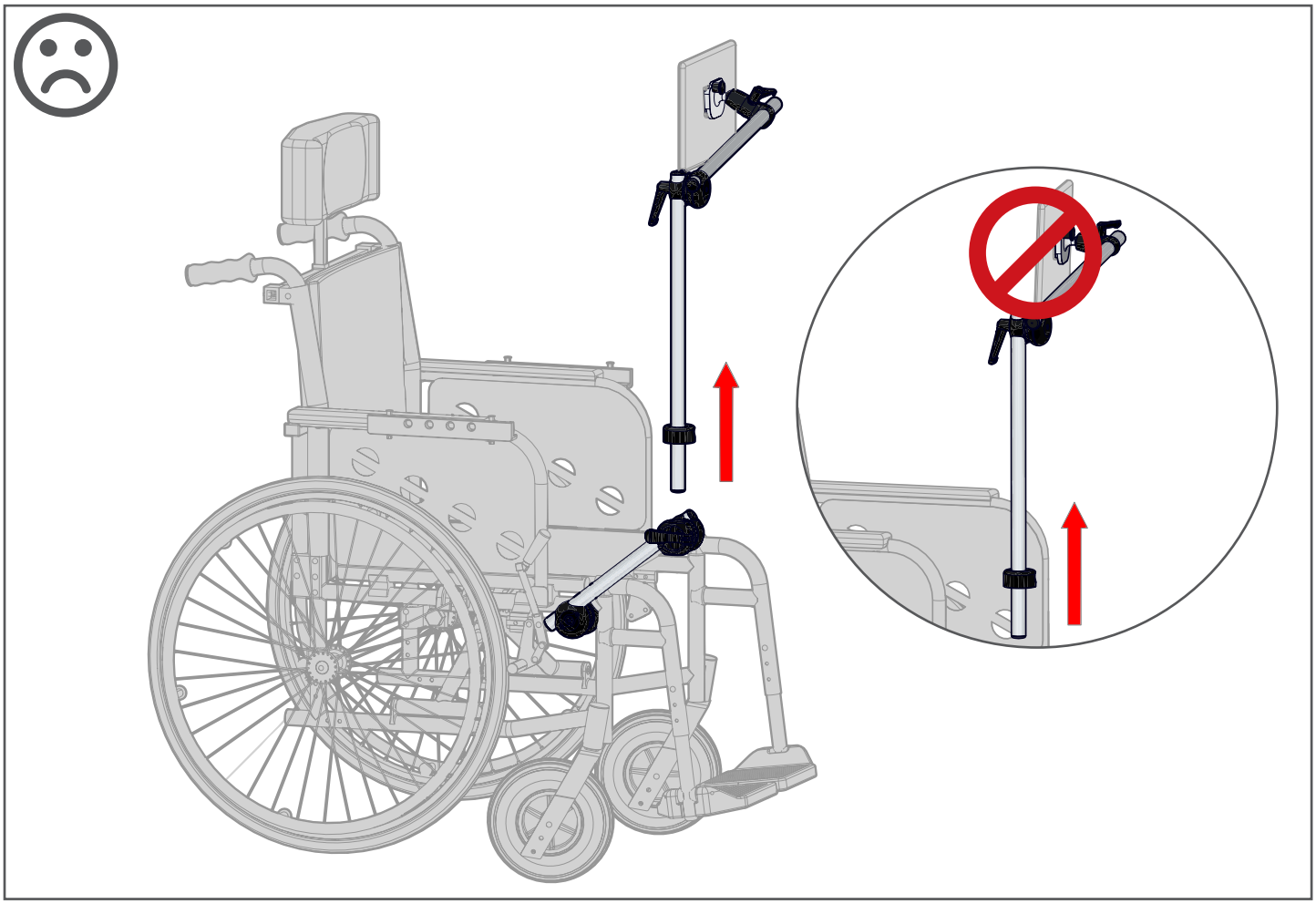

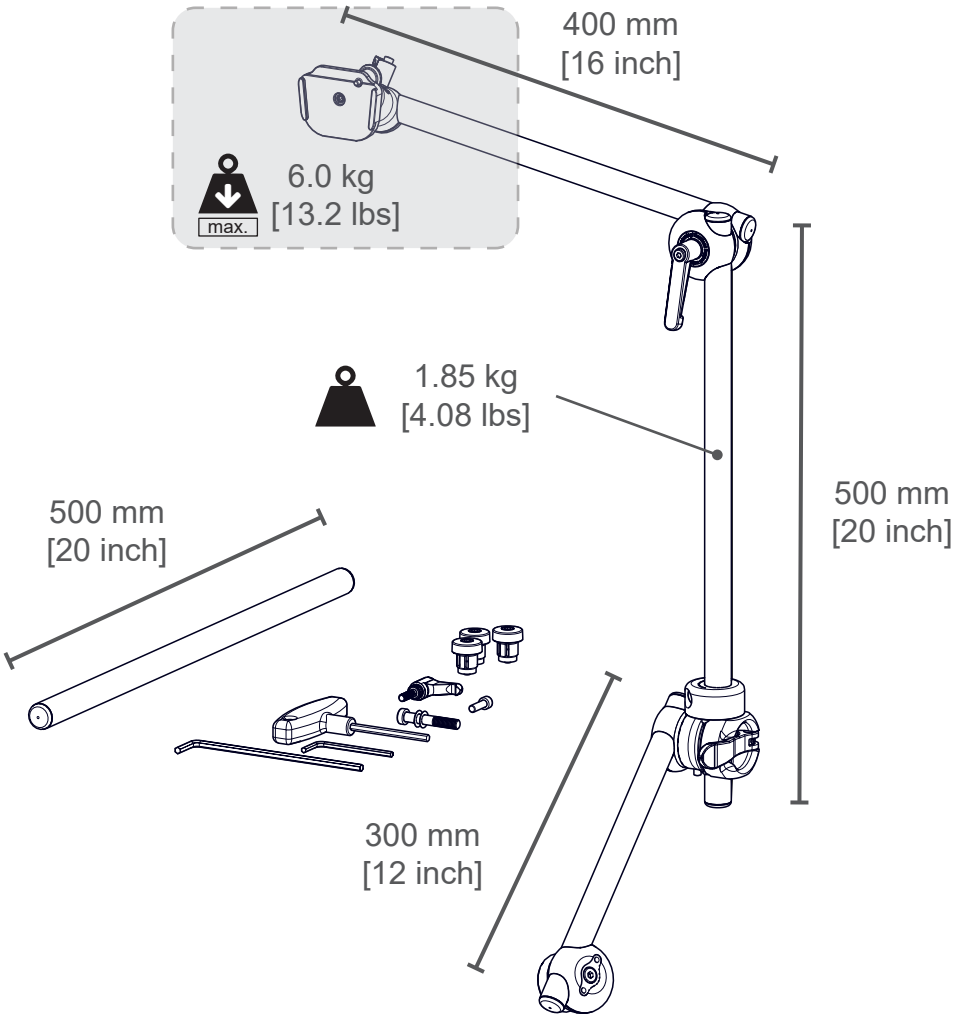
400 mm
[16 inch]
max.
6.0 kg
[13.2 lbs]
1.85 kg
[4.08 lbs]
500 mm
[20 inch]
500 mm
[20 inch]
300 mm
[12 inch]

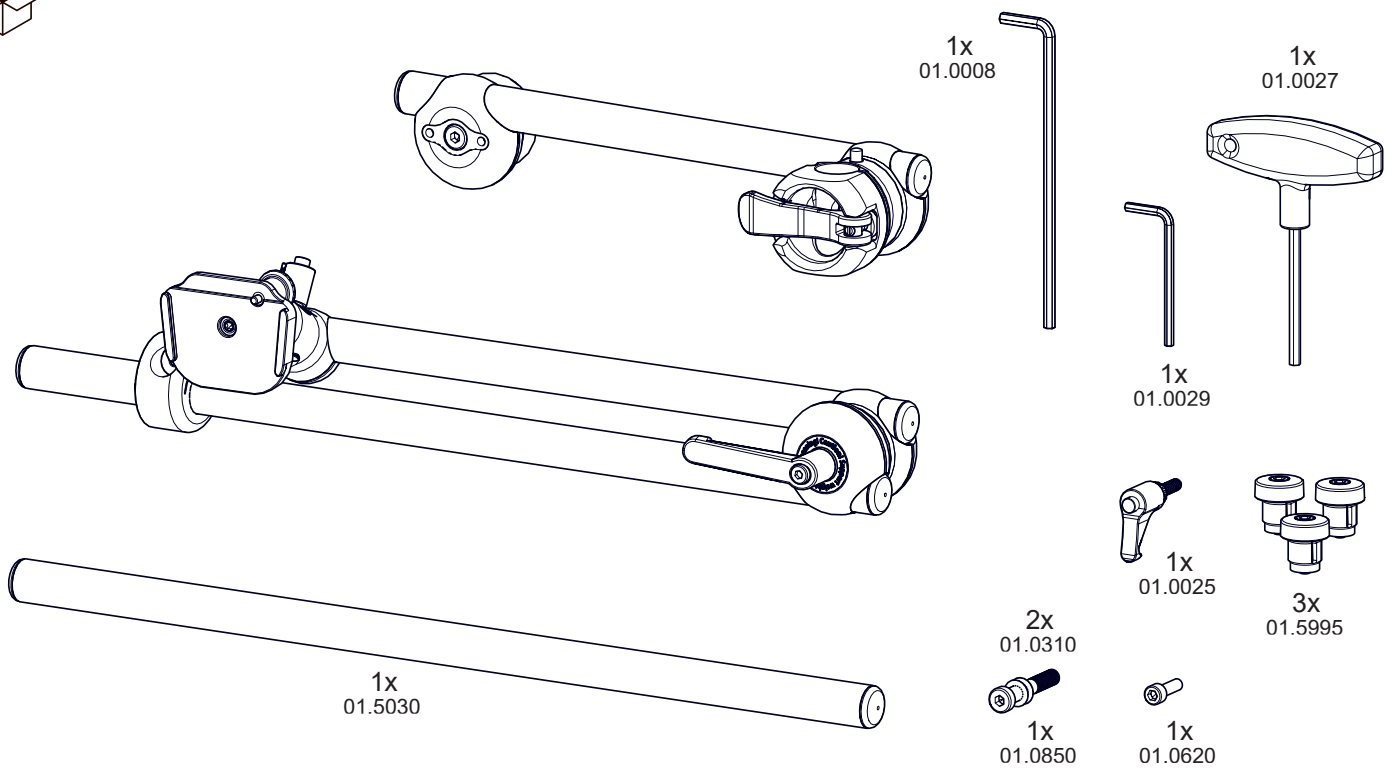
1x
01.0008
1x
01.0027
1x
01.0029
1x
01.0025
3x
01.5995
2x
01.0310
1x
01.5030
1x
01.0850
1x
01.0620

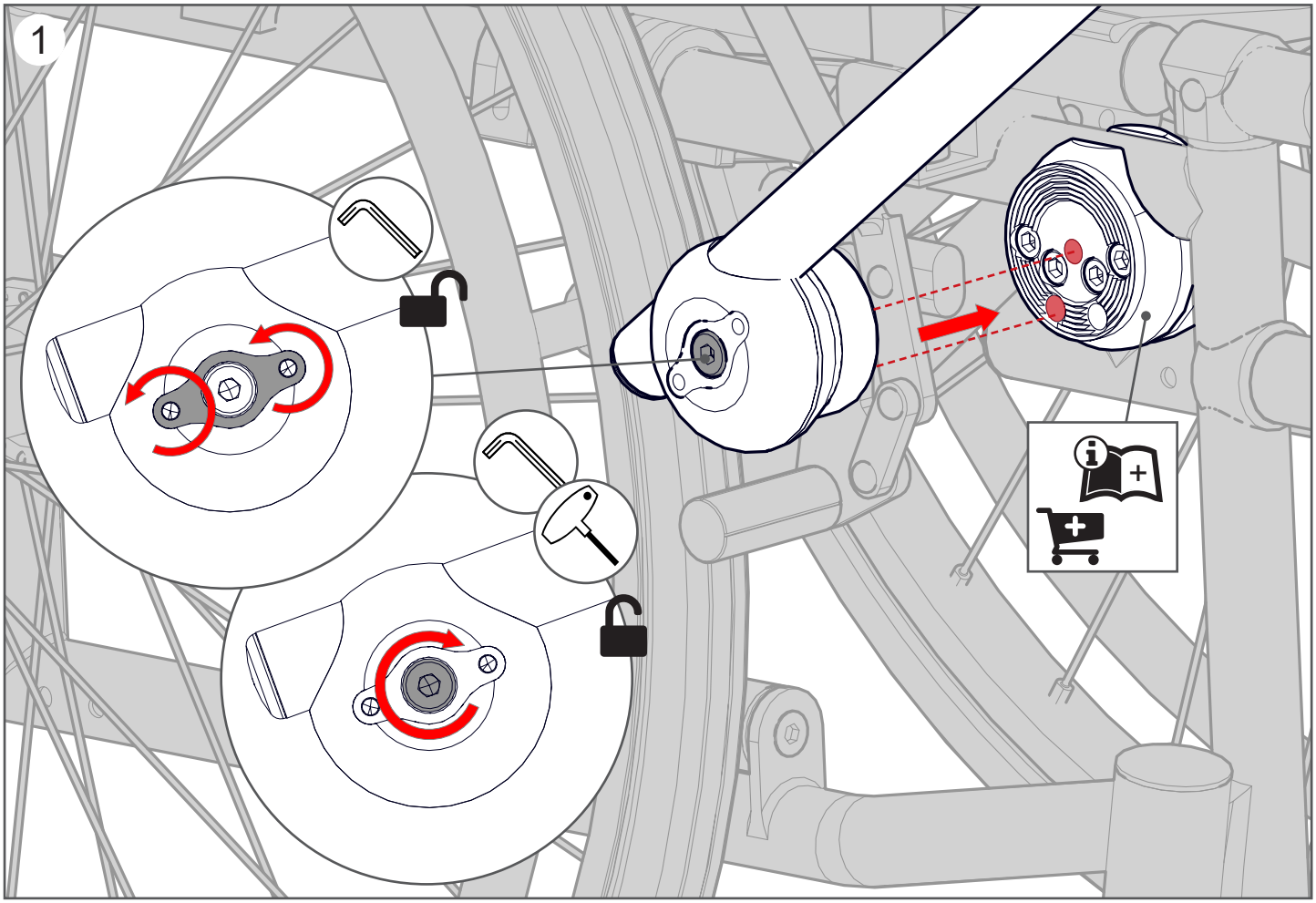
1

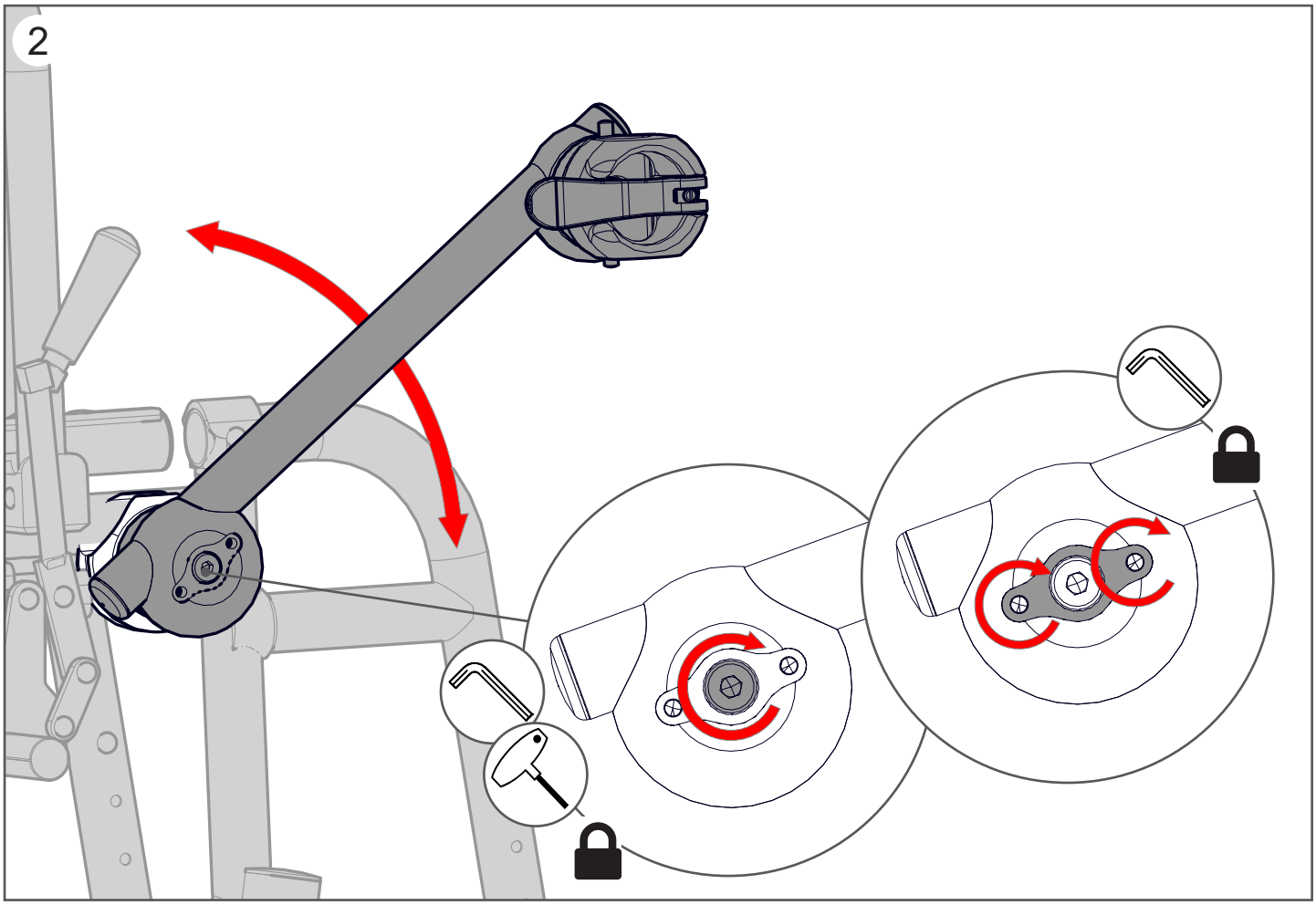
2

3

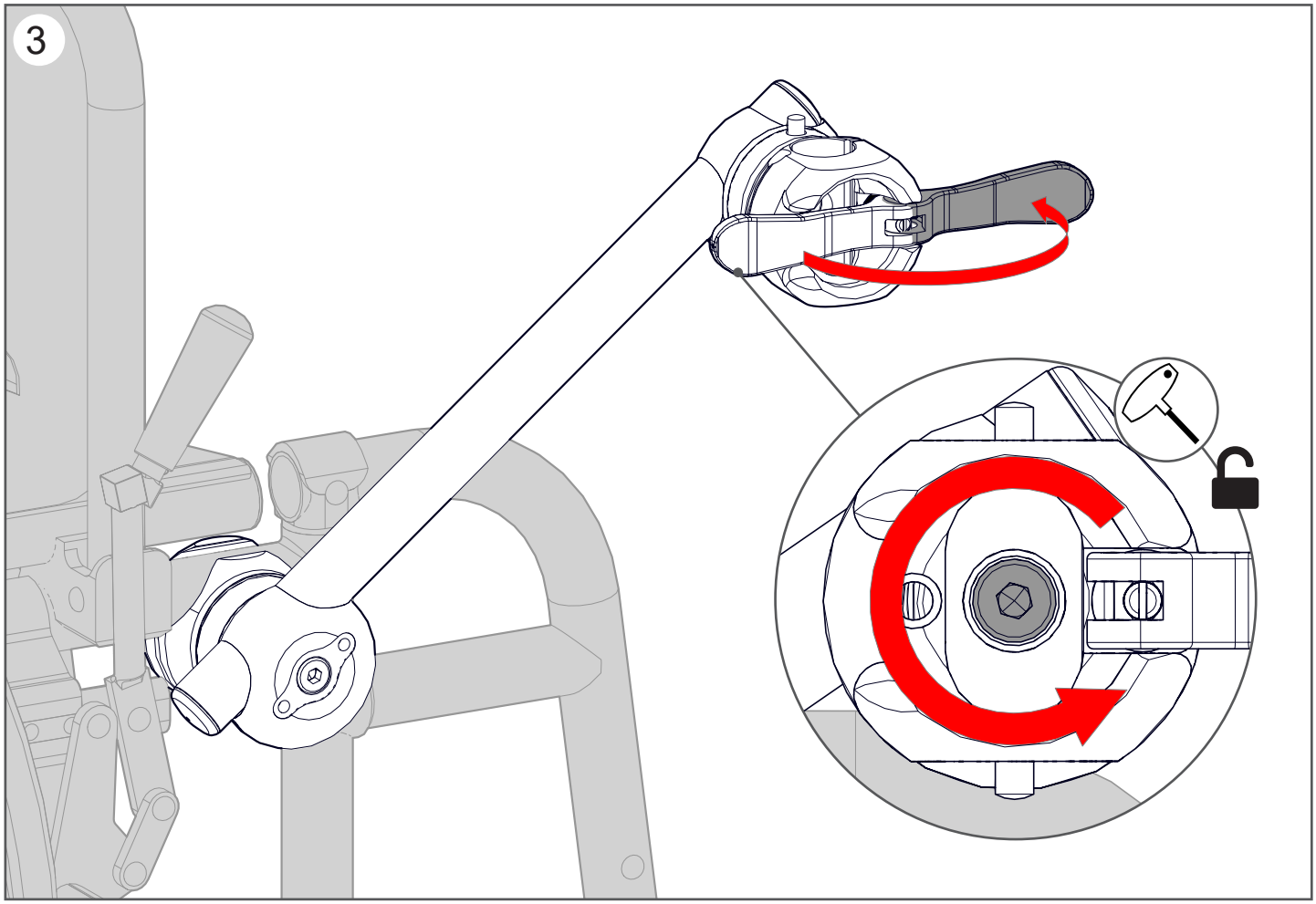

4

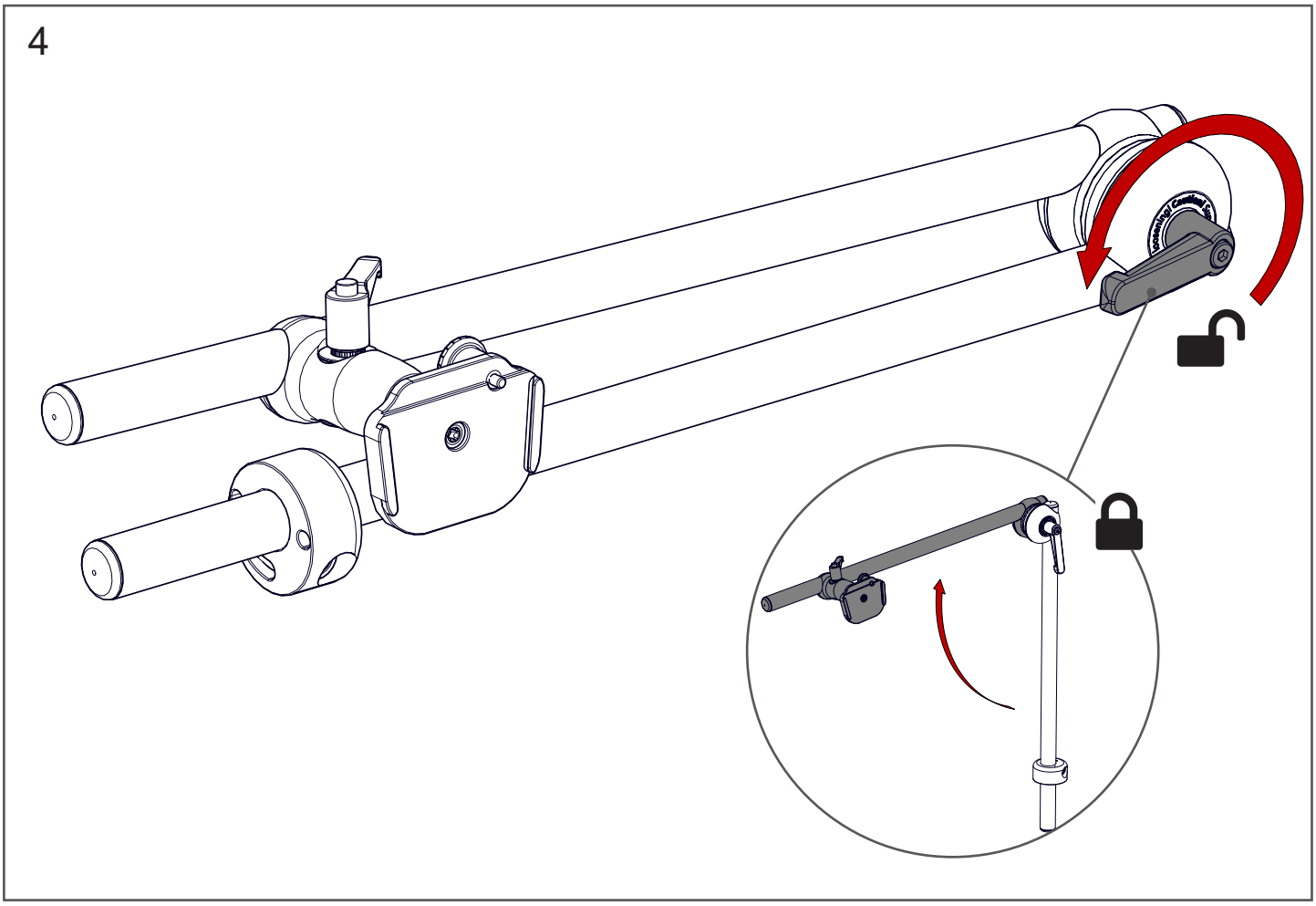

5

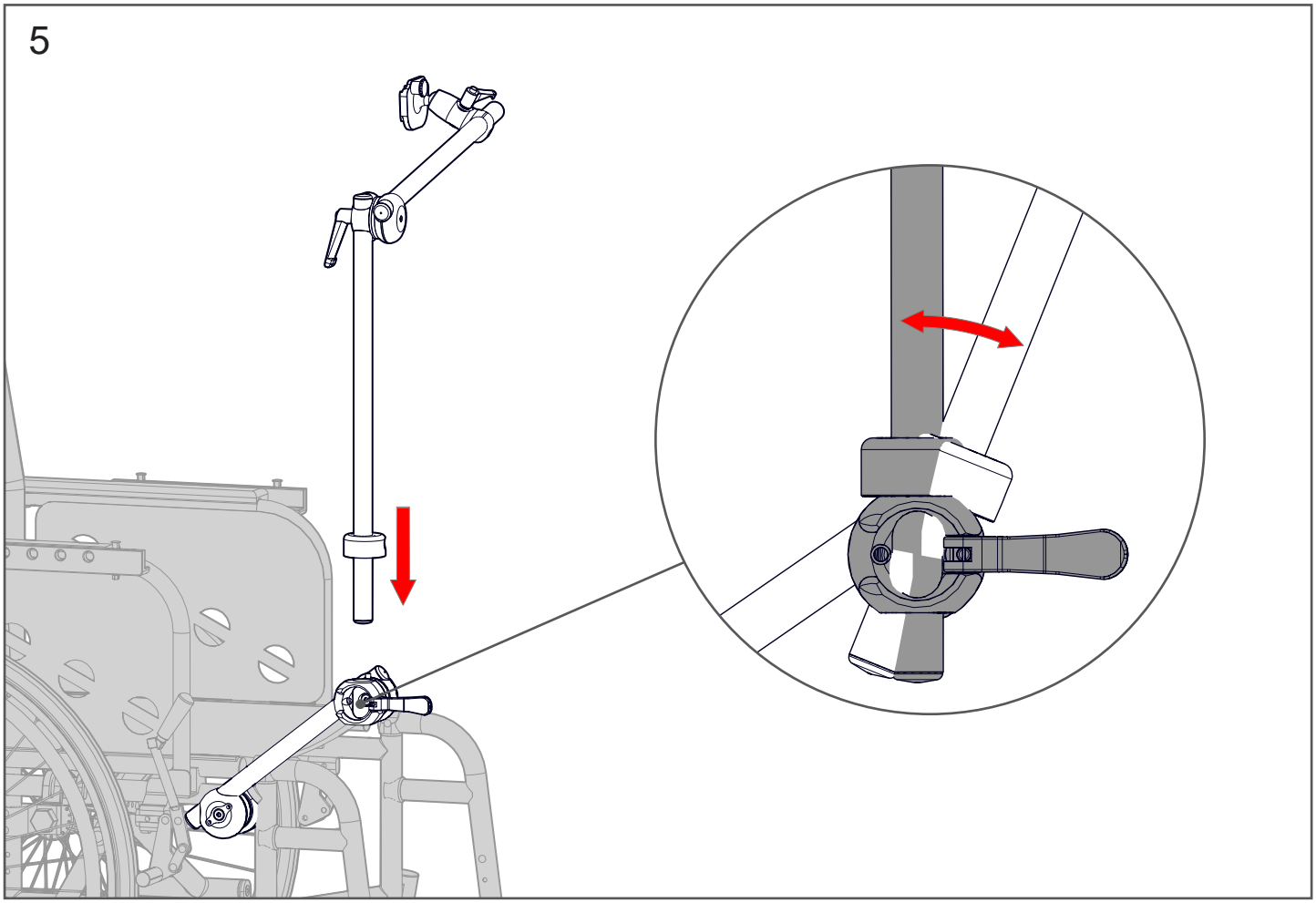

6

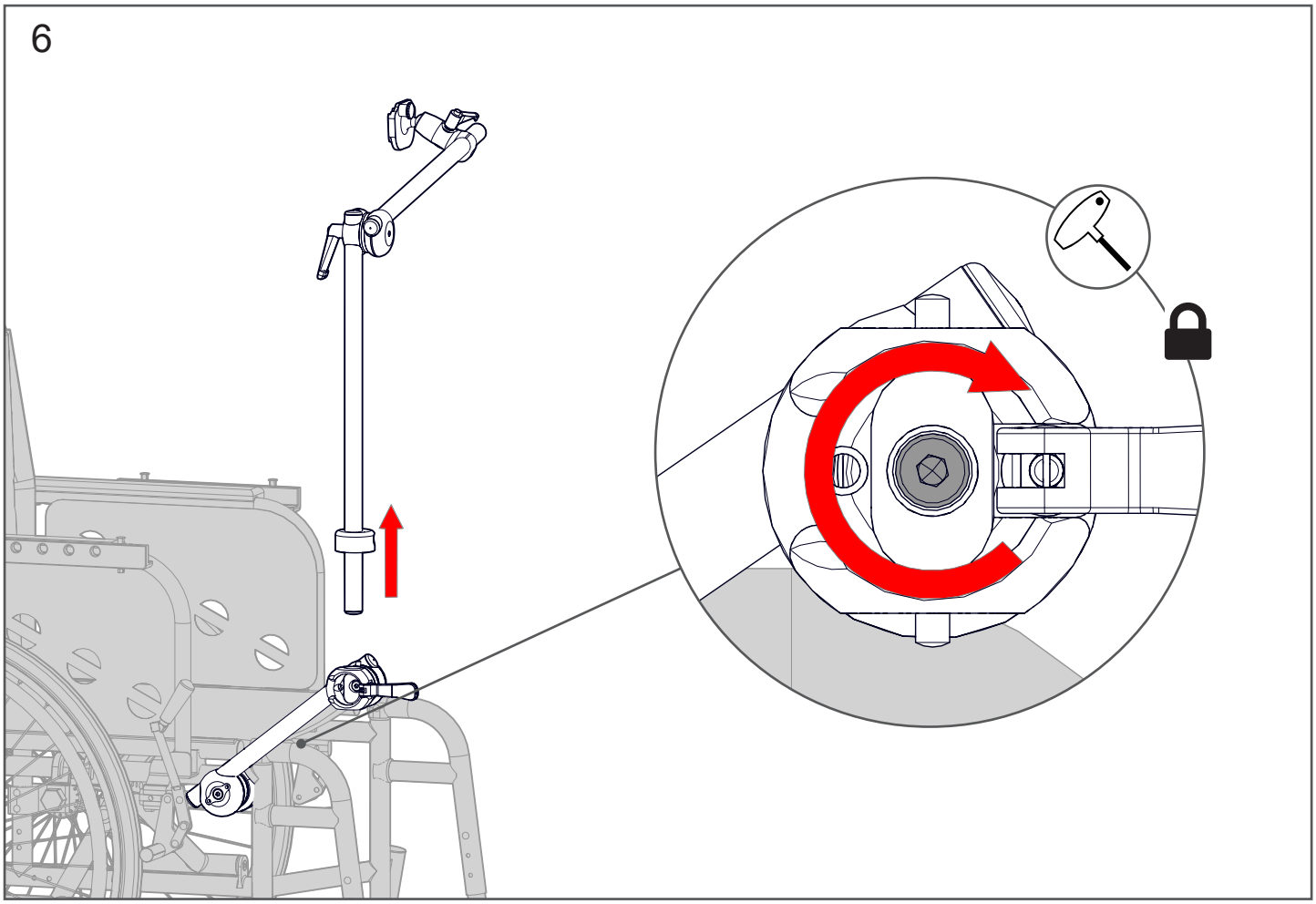

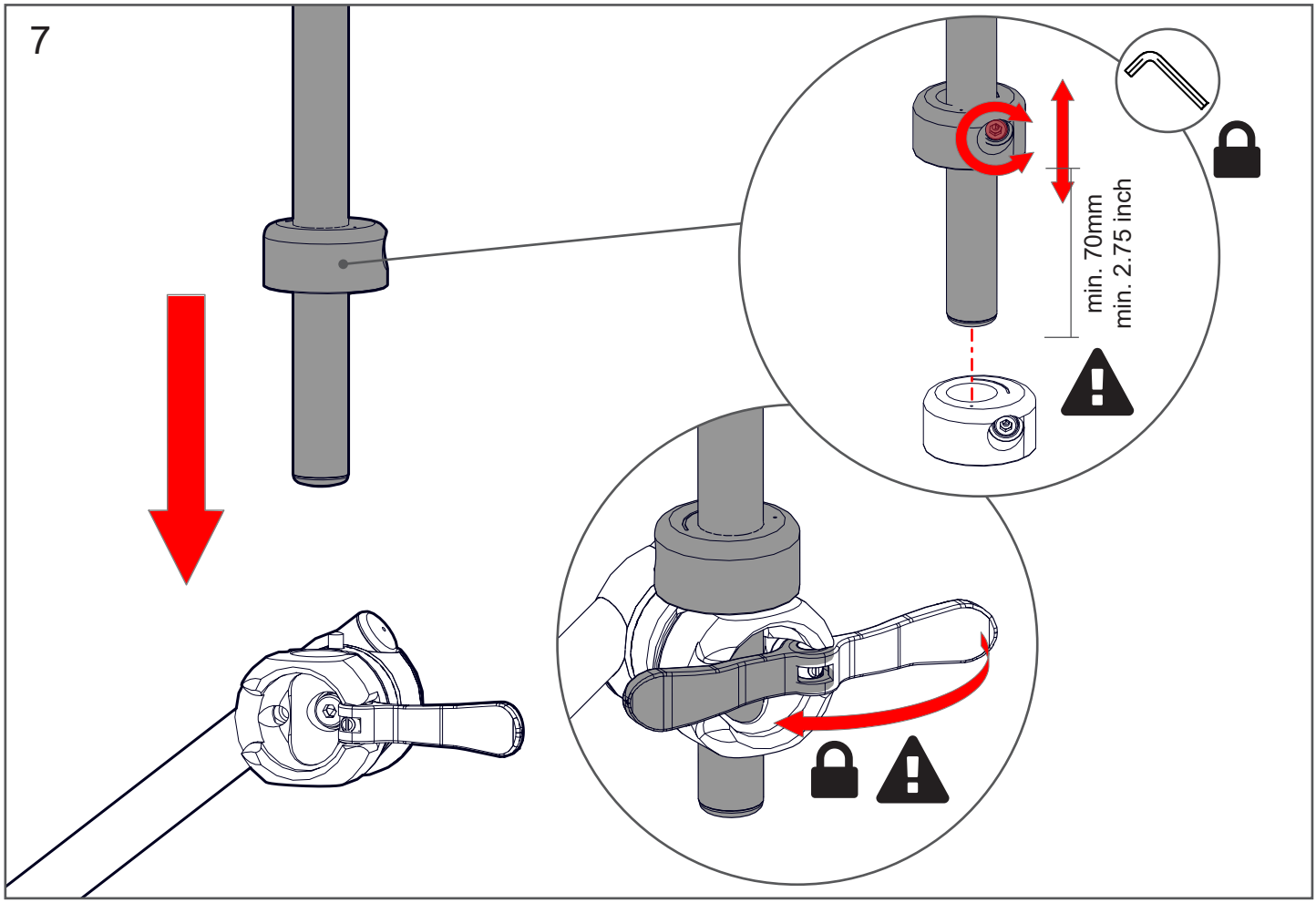
7
min. 70mm
min. 2.75 inch

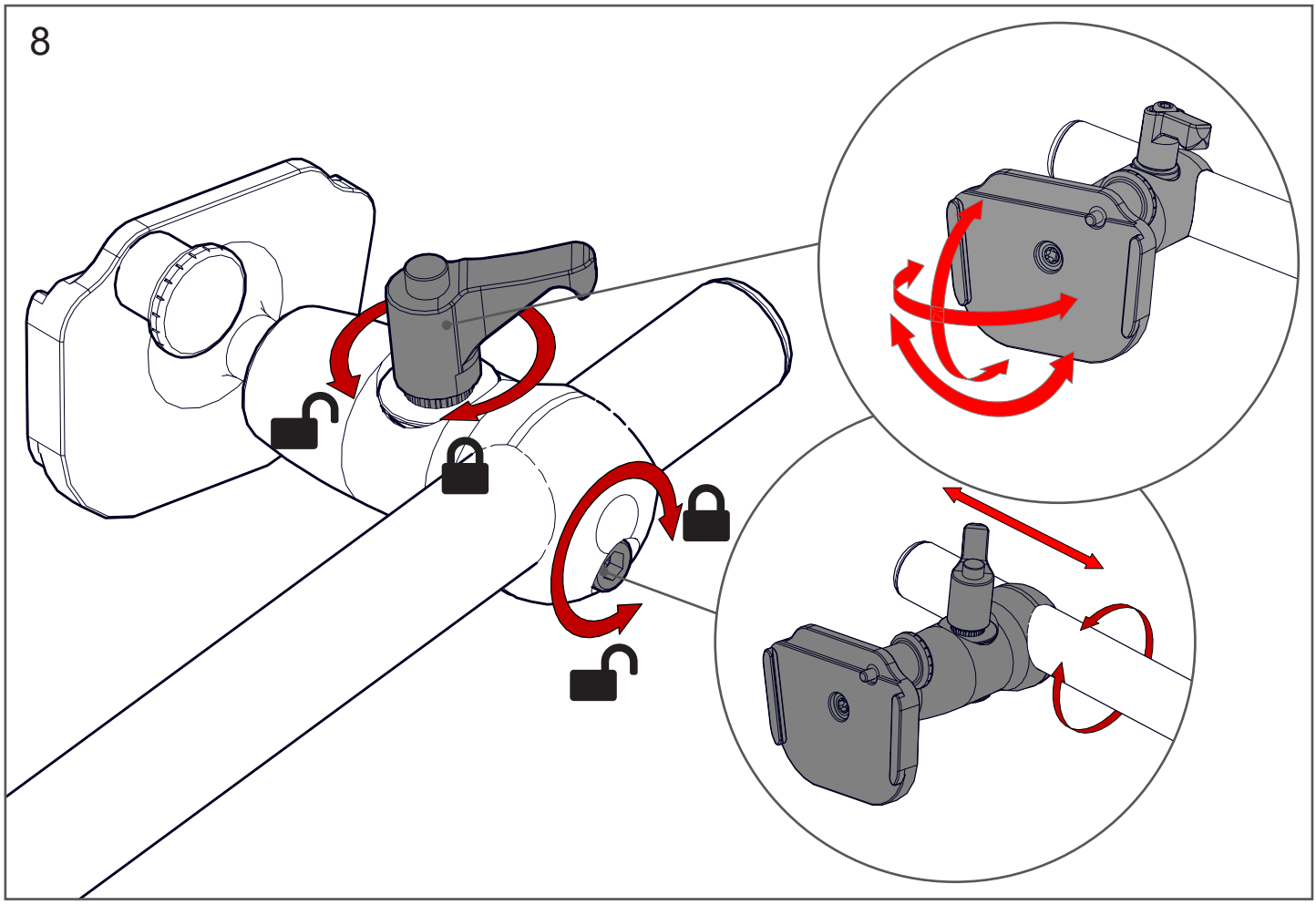
8

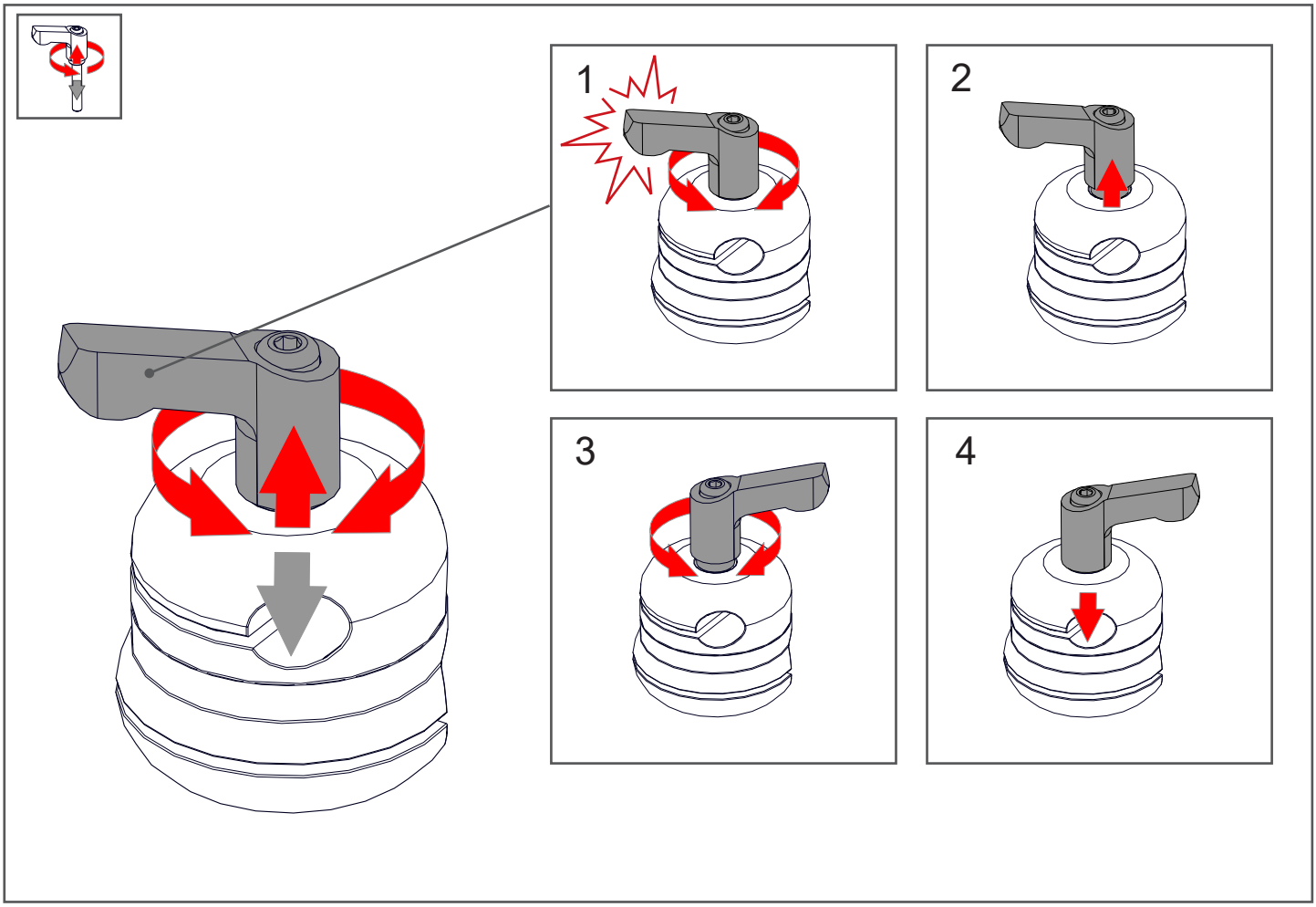
1
2
3
4

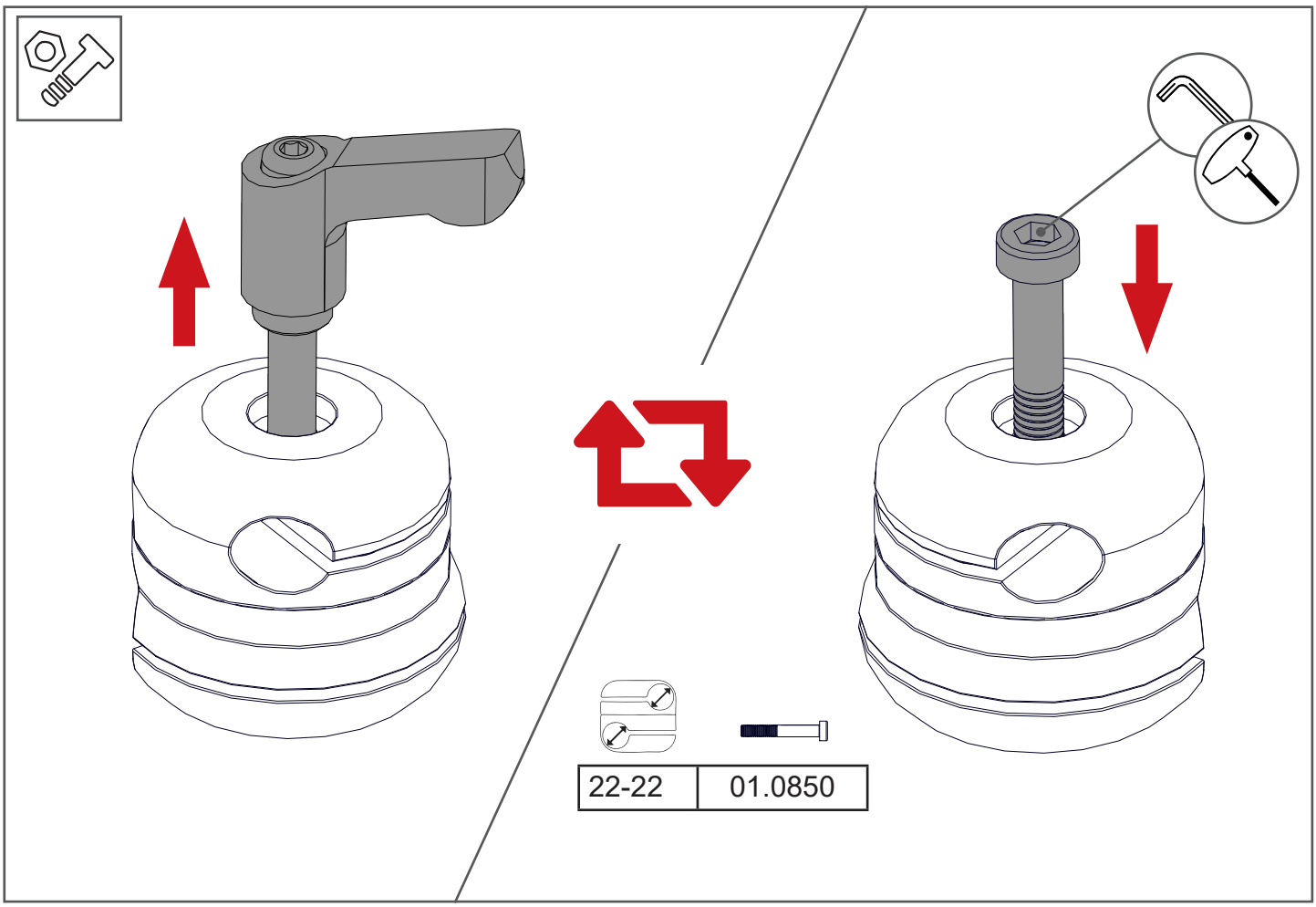
22-22
01.0850

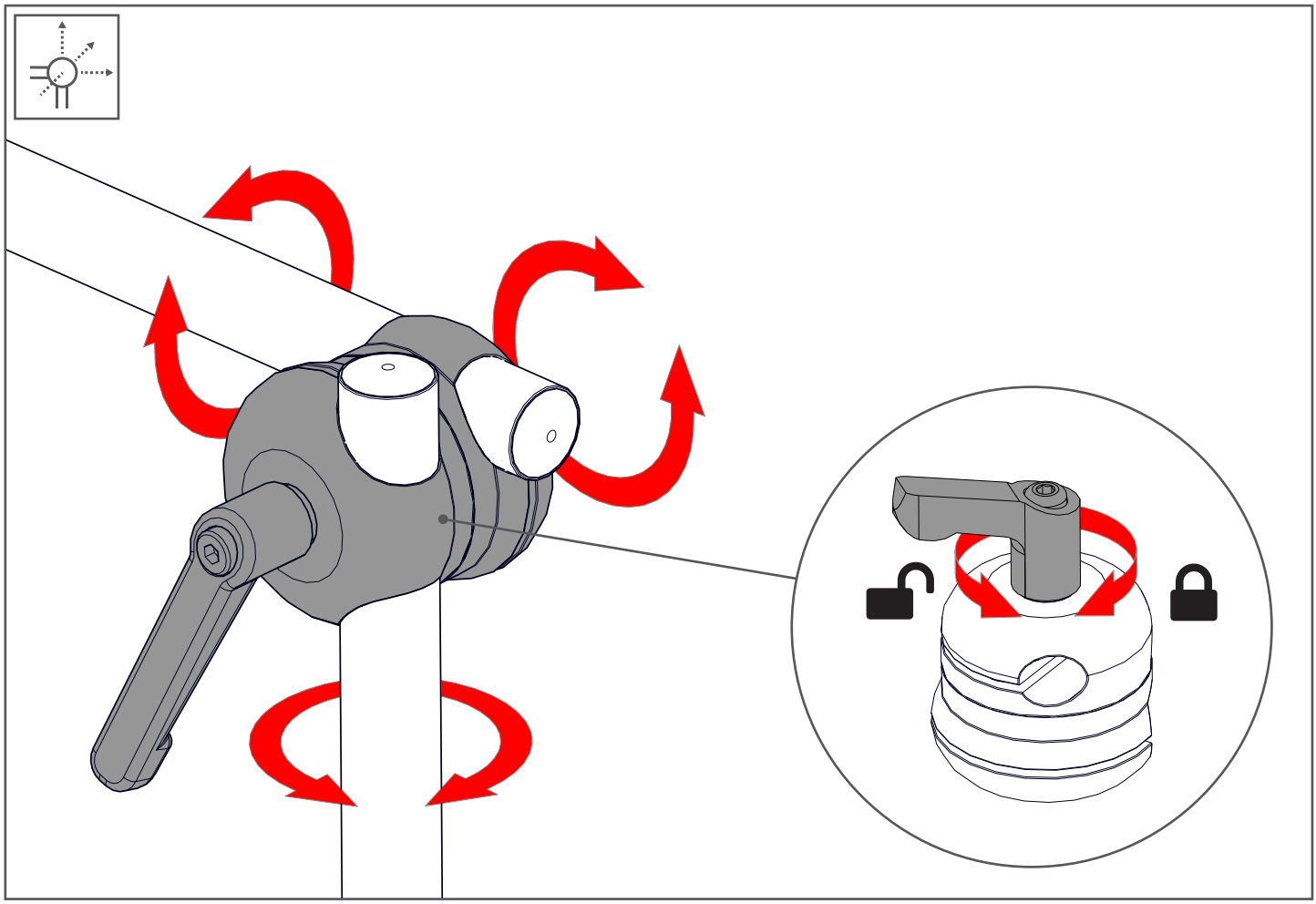

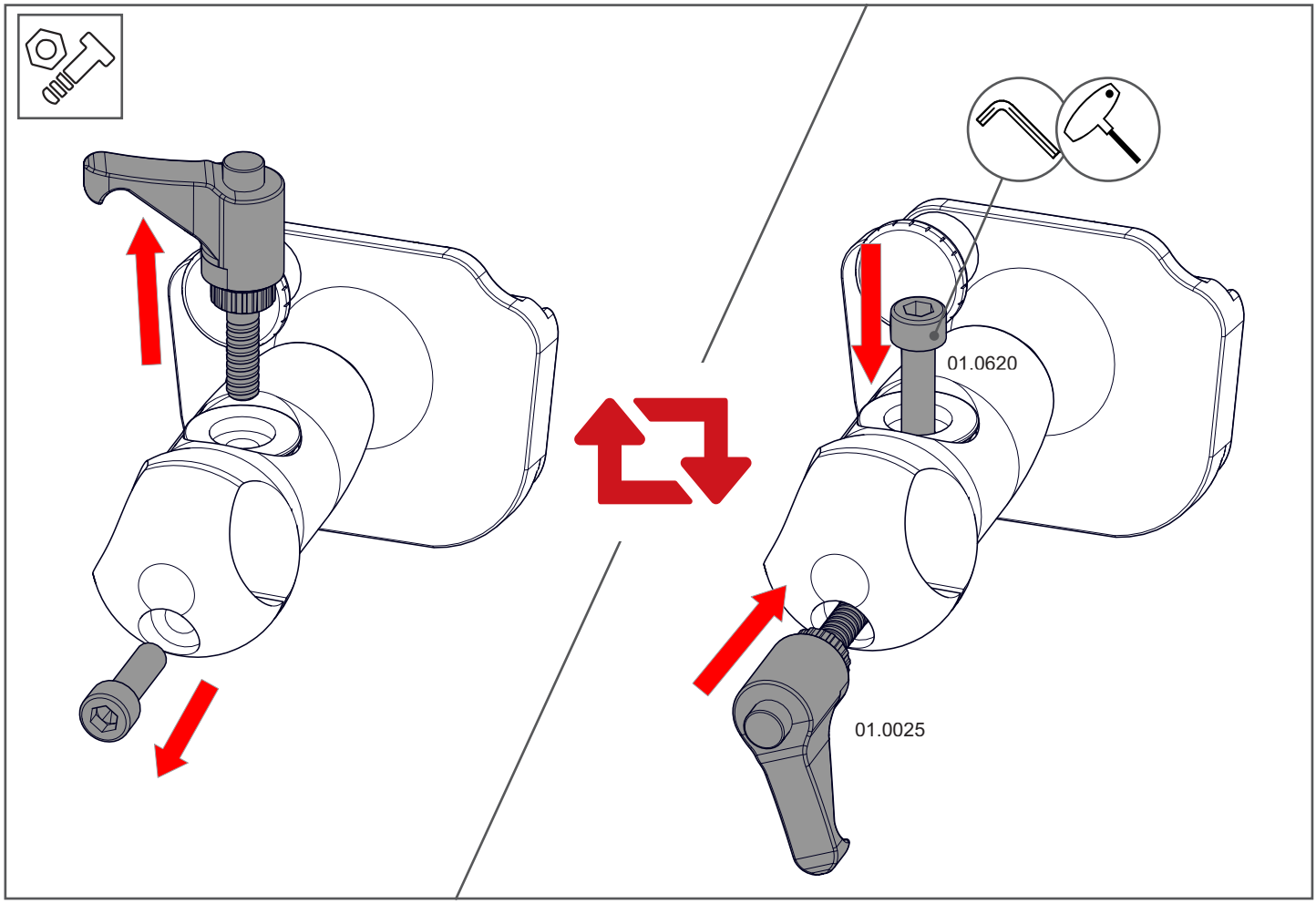
01.0620
01.0025

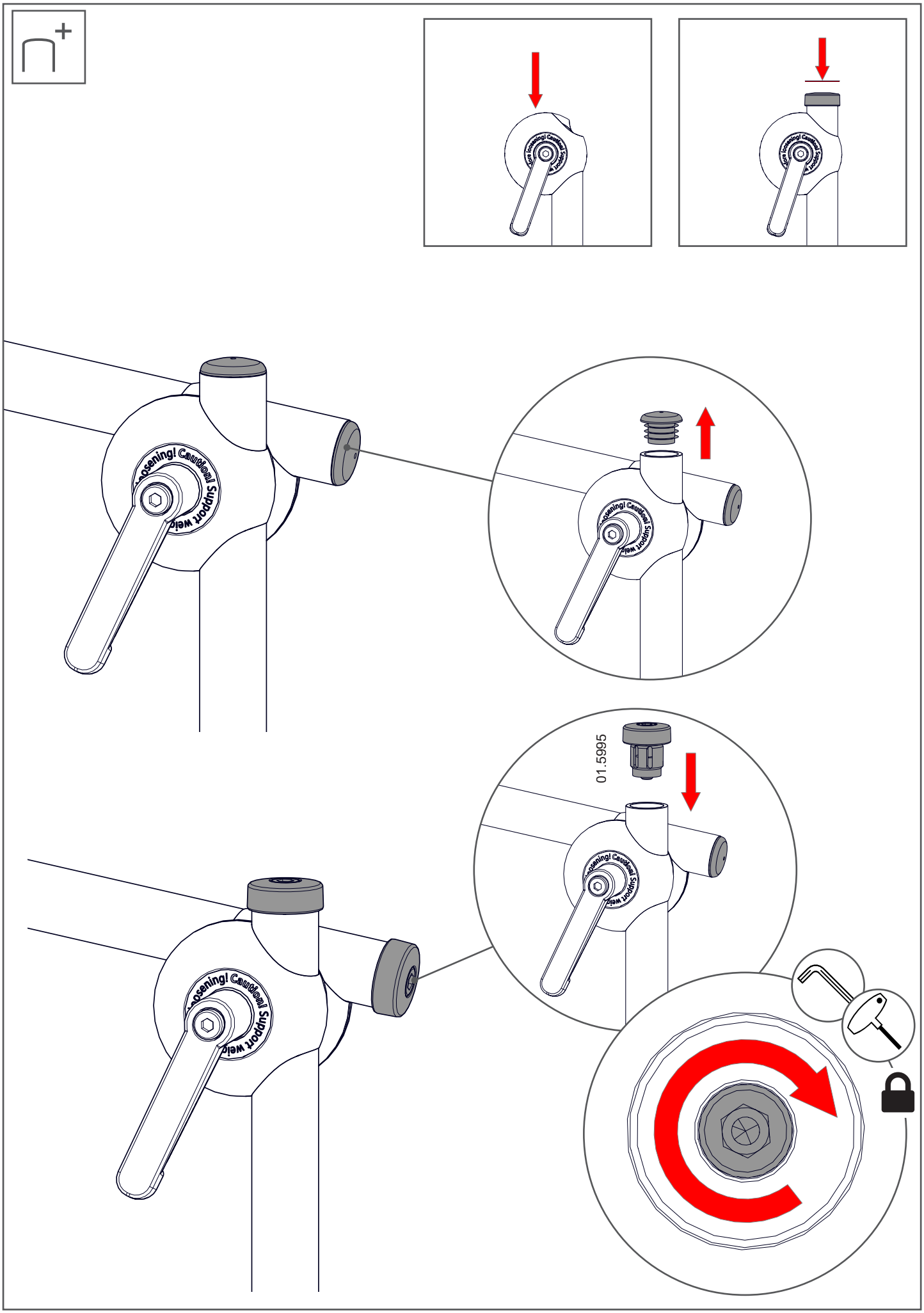
Loosening! Caution!
Support weight
01.5995

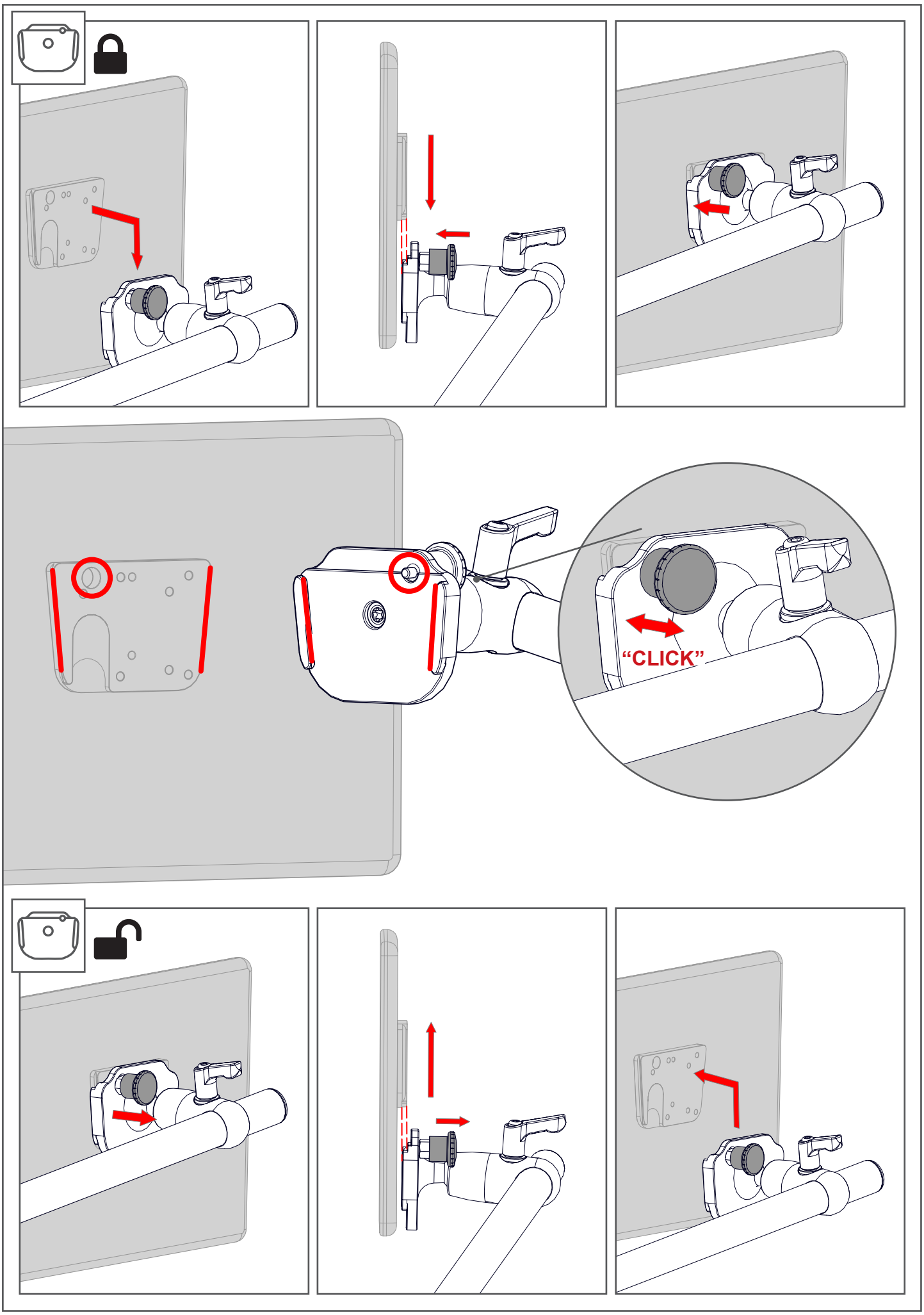
"CLICK"

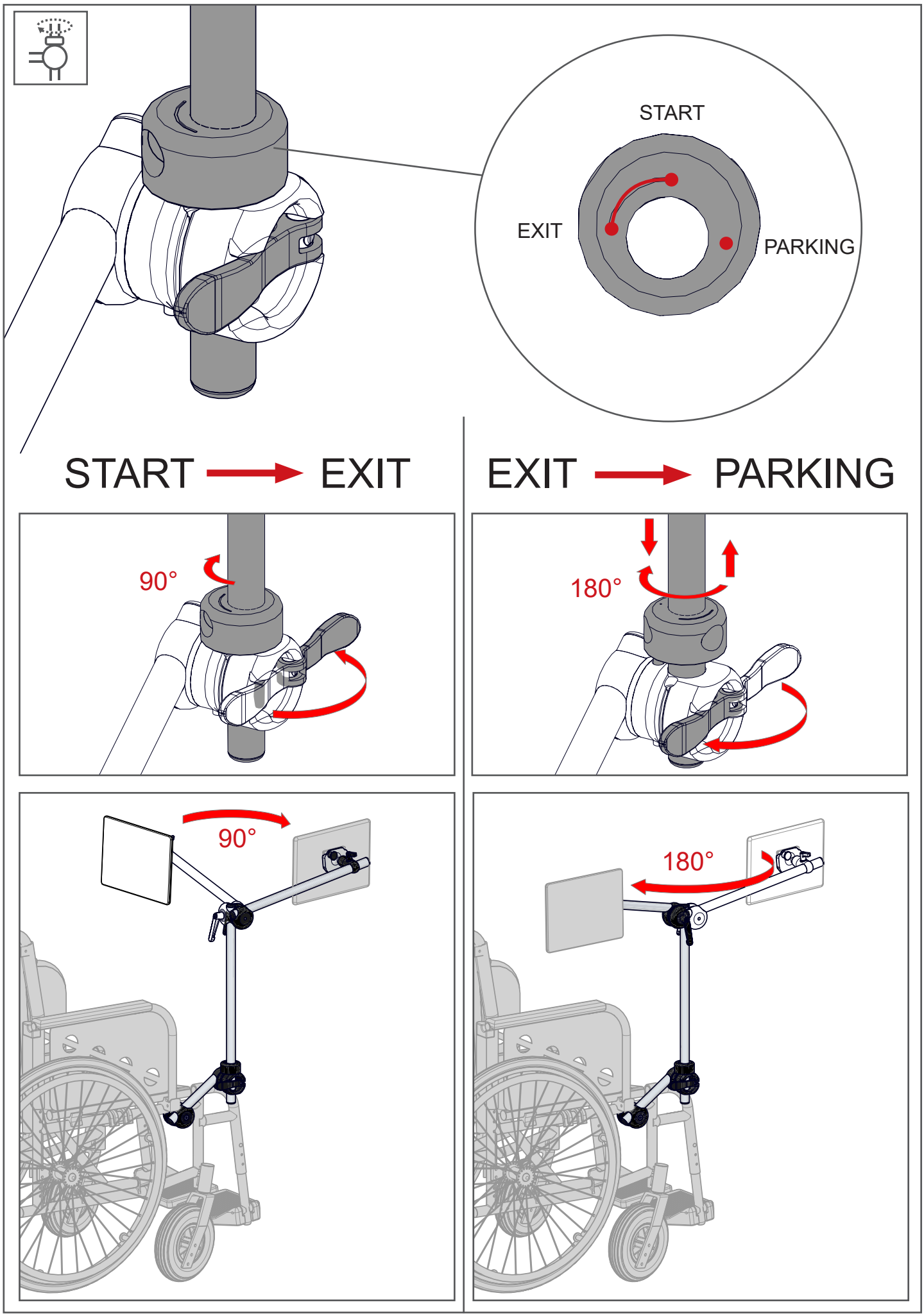
START
EXIT
PARKING
START → EXIT
EXIT → PARKING
90°
180°
90°
180°

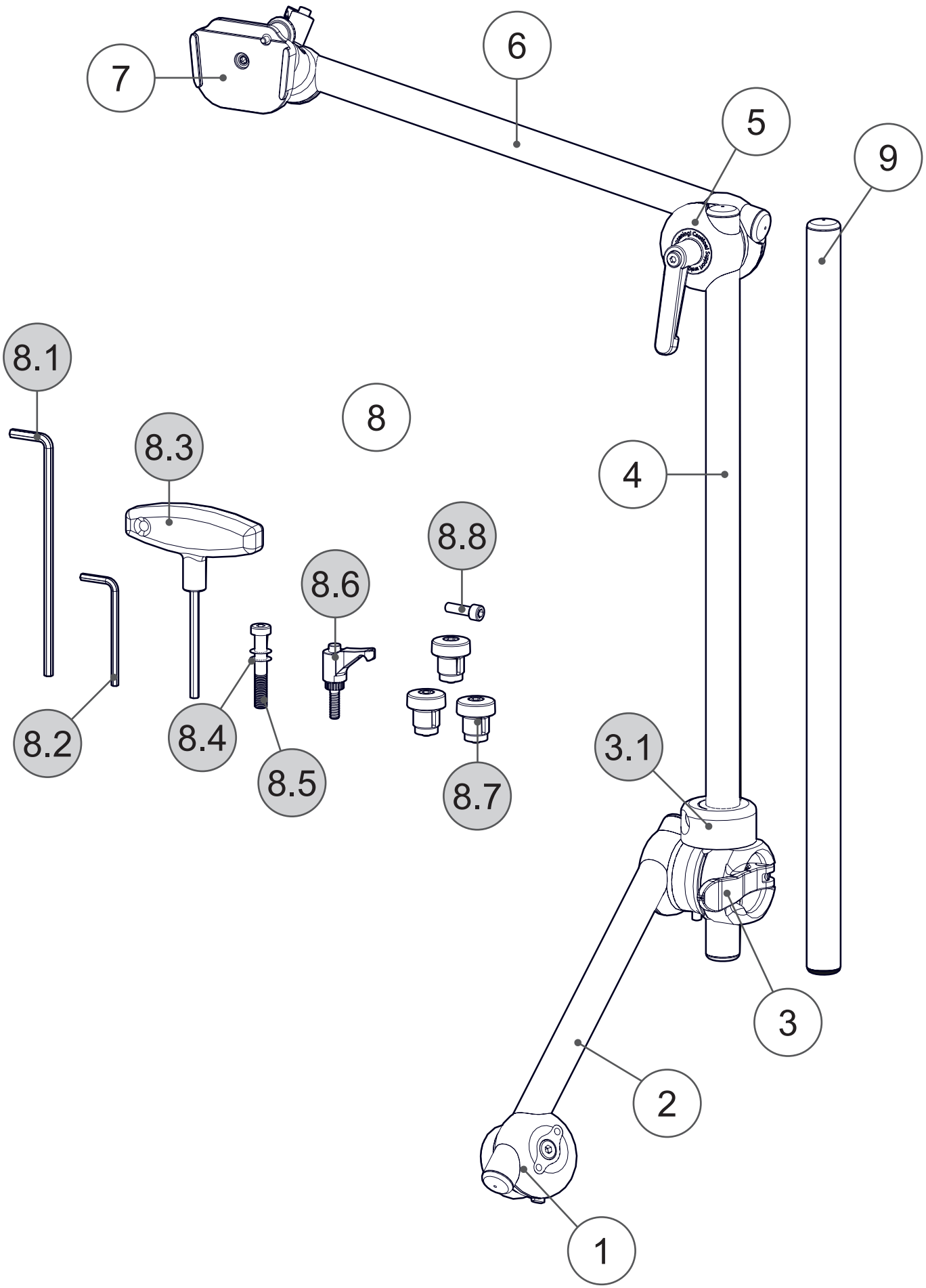
7
6
5
9
8.1
8
8.3
4
8.8
8.6
8.2
8.4
8.5
8.7
3.1
3
2
1

POS	No.	Bezeichnung	Description
1	11.1080	M3D Rohraufnahme Rotation Lock	M3D Tube Socket Rotation Lock
2	01.5010	Rohr Ø22x300	Tube Ø22x300
3	11.1220	M3D Schwenklager S	M3D Swivel-unit S
3.1	11.1251	M3D Rast-Slot	M3D Indexing-Slot
4	01.5030	Rohr Ø22x500	Tube Ø22x500
5	11.1350	M3D Uni QuickShift	M3D Uni QuickShift
6	01.5020	Rohr Ø22x400	Tube Ø22x400
7	16.1051	UGA-22-DC	UDS-22-DC
8	11.3312BS	Schraubensatz - M3D mit UGA-DC	Set of bolts - M3D with UDS-DC
8.1	01.0008	Innensechskantschlüssel 5mm lang	Allen wrench 5mm long
8.2	01.0029	Innensechskantschlüssel 4mm	Allen wrench 4mm
8.3	01.0027	T-Griff	T-Handle
8.4	01.0310	Passscheibe	Adjusting washer
8.5	01.0850	Zylinderschraube M8x50	Cylinder head bolt M8x50
8.6	01.0025	Klemmhebel M6x20	Clamping lever M6x20
8.7	01.5995	Abrutschsicherung	Slip-out safeguard
8.8	01.0620	Zylinderschraube M6x20	Cylinder head bolt M6x20
9	01.5030	Rohr Ø22x500	Tube Ø22x500

vms
virtual mounting service
www.rehadapt.com/vms/

Rehadapt Engineering
GmbH & Co. KG

Heinrich-Hertz-Str. 104
34123 Kassel, Germany

Tel.: +49 561 220 717 0
Fax: +49 561 220 717 99

officeteam@rehadapt.com
https://rehadapt.com

Rehadapt
North America

40 Oser Ave
Hauppauge, NY 11788, USA

Tel.: 1 (888) 635-6962
Fax: 1 (888) 635-6962

officeteam.na@rehadapt.com
https://rehadapt.com