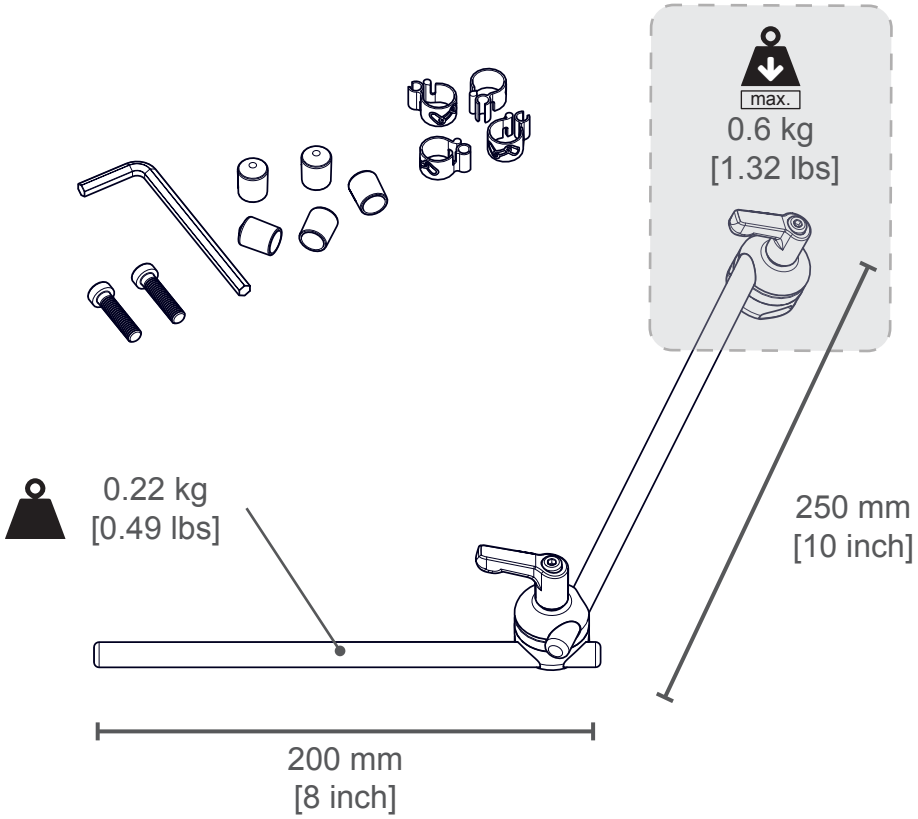
max.
0.6 kg
[1.32 lbs]
0.22 kg
[0.49 lbs]
250 mm
[10 inch]
200 mm
[8 inch]

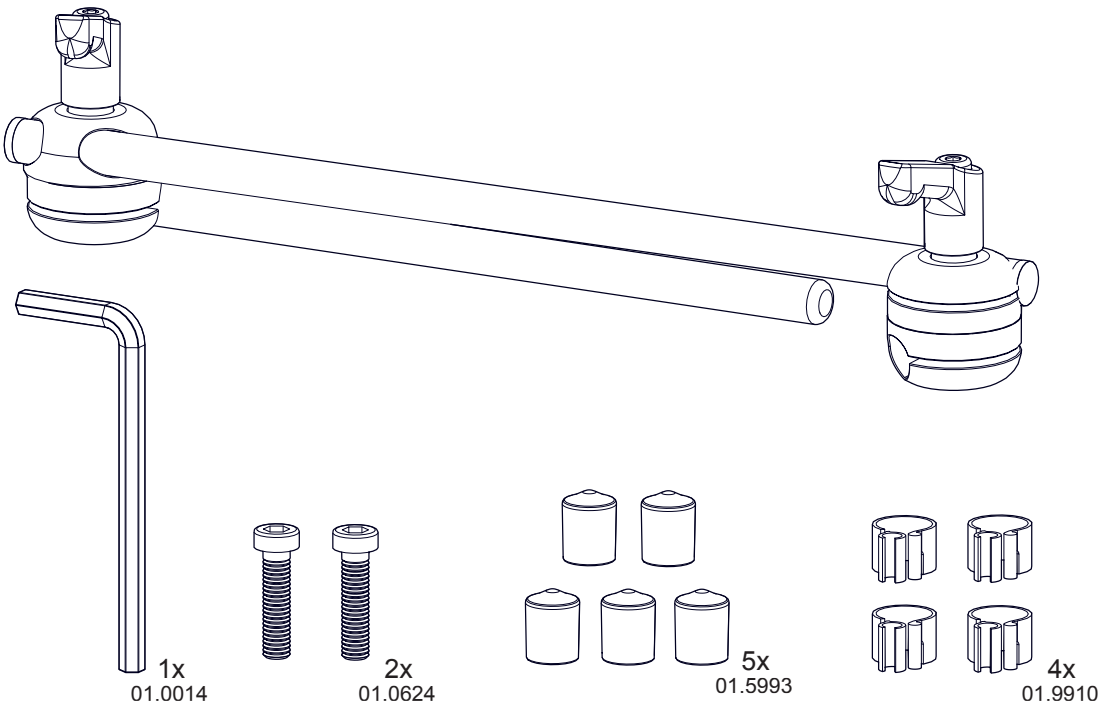
1x
01.0014
2x
01.0624
5x
01.5993
4x
01.9910